GeneralDetails.dgn

BRIDGE PLANS ID	SHEET NO.
XXXXXXX-BXX	XX

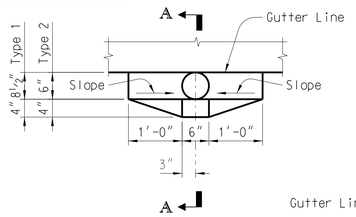

PLAN

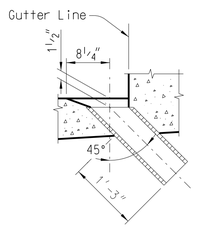

TYPE 1
(PRESTRESSED BEAM)

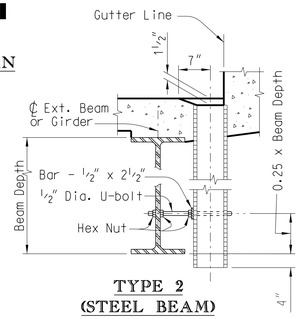

TYPE 2
(STEEL BEAM)

SECTION A-A

DRAIN DETAILS

Provide drain pipes that are 6" nominal diameter fiberglass pipe meeting the requirements of ASTM D 2996 and the accelerated UV weathering performance requirements of ASTM G 154.

Provide pipe that has pigmented resin throughout the wall. Paint, gel-coat, or exterior coating will not be accepted. Color shall be light gray (Federal Shade No. 26622) for concrete and painted structural steel girder bridges, or brown (Federal Shade No. 30045) for weathering steel girder bridges.

Galvanize plate, bolts, and nuts in accordance with AASHTO M 111, AASHTO M 232, or ASTM F 2329 as applicable. Paint U-bolt assemblies the appropriate Federal Shade No. to match the girder.

To anchor the pipe, cement at least two suitable lugs of a satisfactory size to the portion of the pipe to be embedded in the concrete slab.

Include all costs of furnishing and placing drains in the unit price bid for Class 4000 concrete. Include all costs of furnishing and painting U-bolt assemblies in the lump sum bid for structural steel.

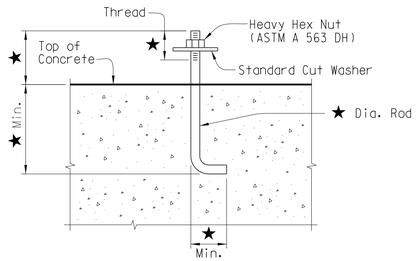

ANCHOR BOLT DETAILS

See reinforcing steel schedule on bent sheets for length and number of anchor bolt assemblies required. Provide anchor bolts that conform with ASTM F 1554 (Gr. ★). Ship anchor bolts and nuts assembled.

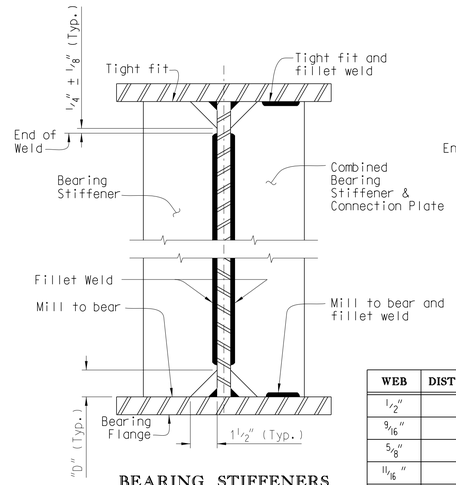

BEARING STIFFENERS

WEB	DISTANCE "D"
½"	2¼"
9/16"	3"
⅝"	3"
11/16"	3"
¾"	3½"

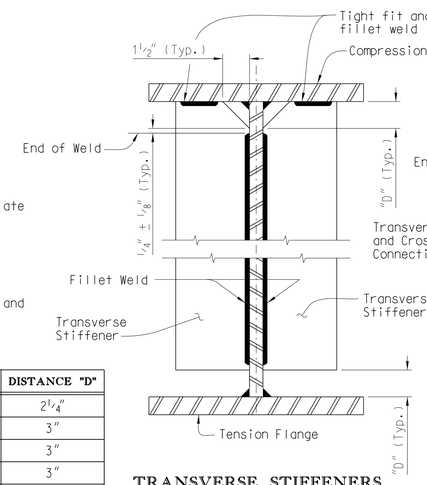

TRANSVERSE STIFFENERS

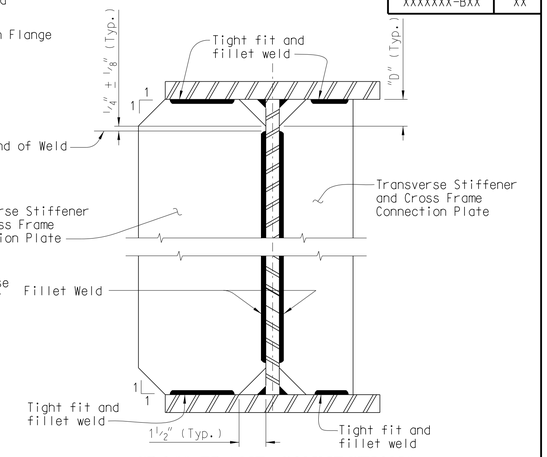

CROSS FRAME CONNECTIONS

WELDING DETAILS
(WELDED PLATE GIRDER)

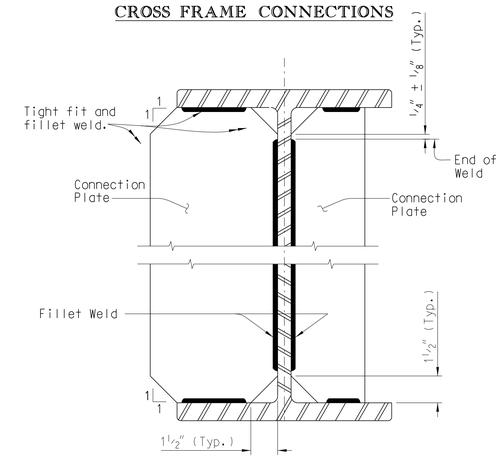

DIAPHRAGM CONNECTION PLATES

WELDING DETAIL
(ROLLED BEAMS)

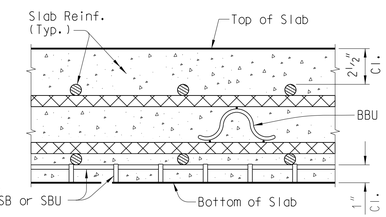

BAR SUPPORT DETAIL

(Section parallel to ℄ roadway)

For bar supports that contact forms or floor surfaces, use plastic bar supports that conform to the requirements of the Standard Specifications. Protect the plastic bar supports from exposure to sunlight until placed in the form. Where removable forms are used, do not use continuous legs or rails that are in contact with the forms.

For supports that do not contact forms or floor surfaces, use wire bar supports that conform to the requirements of the Standard Specifications. In applications where galvanized bars are used, use galvanized wire supports.

① Use SBU where steel stay-in-place forms used, use SB elsewhere.

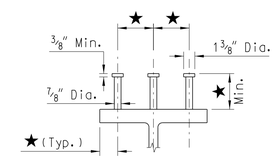

WELDED STUDS DETAIL

Skew studs parallel to bottom slab steel. Ensure stud length provides minimum 2" penetration of stud into the deck slab.

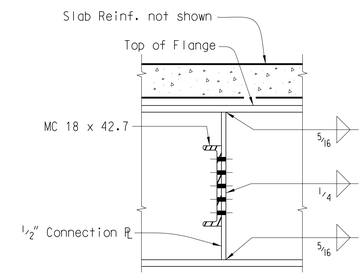

SECTION THRU STEEL INT. DIAPH.
(ROLLED BEAMS)

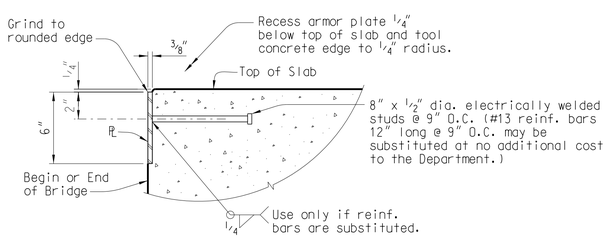

ARMOR PLATE DETAIL

Install ⅜" thick plates, as detailed above, at the beginning and end of the bridge.

Provide steel for the armor plates that conforms to the latest AASHTO M 270 Grade 50W (ASTM A 709 Gr. 50W) steel and neither the plates nor the anchor studs need to be painted.

Provide fabricated plates that conform to the crown and grade of the roadway and extend from gutter line to gutter line. The plates may be fabricated in reasonable lengths and connected at the job site with full penetration butt welds ground flush along the top face of connected plates.

Holes, 9/16" dia., spaced approximately 2'-0" on center may be provided in the lower portion of the plates to bolt the plates to the forms.

Include all costs of material and workmanship to fabricate, furnish, and install the armor plates and anchor studs complete in place in the unit price bid for Class 4000 concrete.

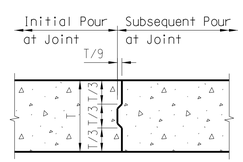

CONST. JT. DETAIL

Before making subsequent pour, wait either a minimum of 96 hours after placement of the initial pour or until the initial pour concrete has attained a minimum of 75% of the specified 28-day compressive strength as verified by testing extra cylinders.

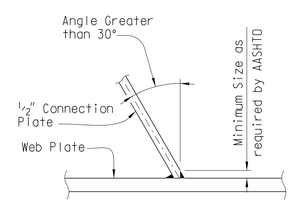

FILLET WELD DETAIL

Connection for plates to webs when skew is in excess of 30°.

Note to Designer:

This drawing furnished for information only. All dimensions shown are sheet specific. Any use of this design and drawing, including dimensions, must be checked by the User's Engineer to ensure design is adequate for the intended use. All drawings must be signed and sealed by a South Carolina Registered Professional Engineer when used.

Incorporate into the set of Bridge Plans the appropriate details for two separate 2" diameter Schedule 80 PVC conduits in all concrete bridge barrier parapets and concrete railing walls. Include the applicable expansion/deflection fitting detail and/or expansion fitting detail. For any conduit lengths in excess of 300', detail pull boxes. See MiscellaneousDetails.dgn, Drawing No. 700-Misc.

	BY	CHK.	DATE
REV.			
REV.	PCW	LEM	9-17
	Bar Support Det.		
REV.	BMH	JXY	12-14
	Const. Jt.		
REVIEWED			
QUAN.			
DR.	SRM	PNP	SAN 8-07
DES.			

SOUTH CAROLINA
DEPARTMENT OF TRANSPORTATION

GENERAL DETAILS

COUNTY: XXXXXXXX
ROUTE: XXXXXX

DRAWING NO. 700-05

★ Designer to input appropriate dimensions / grade.

Printed: Wednesday, April 25, 2018 8:42:59 AM

Note to Designer:

See Bridge Design Memorandum DM0408. In the detail below, insert the reqiured embedment depth of the dowel. If field testing is required, provide the required test load in the note below.

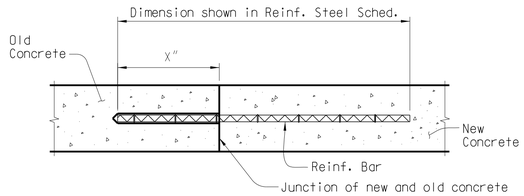

ADHESIVELY BONDED DOWEL DETAIL

Clean contact surface of old concrete. Ensure that the surface is free of laitance and roughen the surface to an amplitude of 1/4".

Provide and install anchorages in accordance with the requirements of the Supplemental Specification for Adhesively Bonded Anchors and Dowels. Use an adhesive bonding system that has a minimum bond strength of 1.5 ksi. Field test the anchorages, using a test load of XX kips per anchor, in accordance with the requirements of the Supplemental Specification.

Note to Designer:

Delete Paragraph that is not applicable.

Provide and install anchorages in accordance with the requirements of the Supplemental Specification for Adhesively Bonded Anchors and Dowels. Use an adhesive bonding system that has a minimum bond strength of 1.5 ksi. Field testing of the anchorages is not required.

Include all costs of adhesively bonded dowels in the contract unit price bid for reinforcing steel. Include all costs of cleaning and roughening the existing concrete surface in the contract unit price bid for Class 4000 Concrete.

Note to Designer:

For Thrie Beam Guard Rail Attachment to parapet see 700-Misc Miscellaneous Details

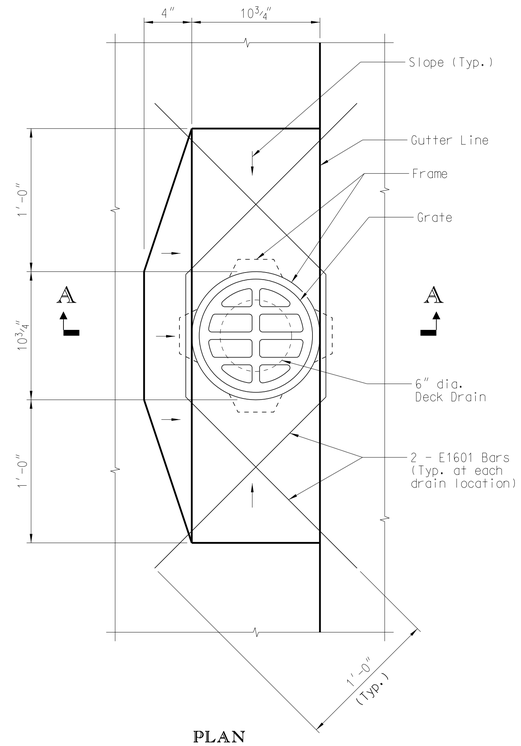

PLAN

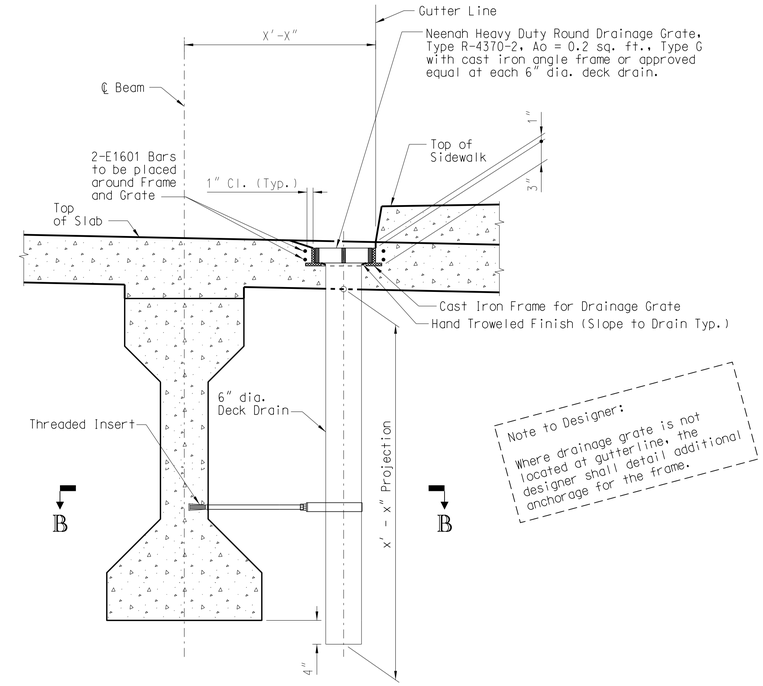

SECTION A-A

Note to Designer:

Where drainage grate is not located at gutterline, the designer shall detail additional anchorage for the frame.

DRAIN DETAILS WITH GRATE

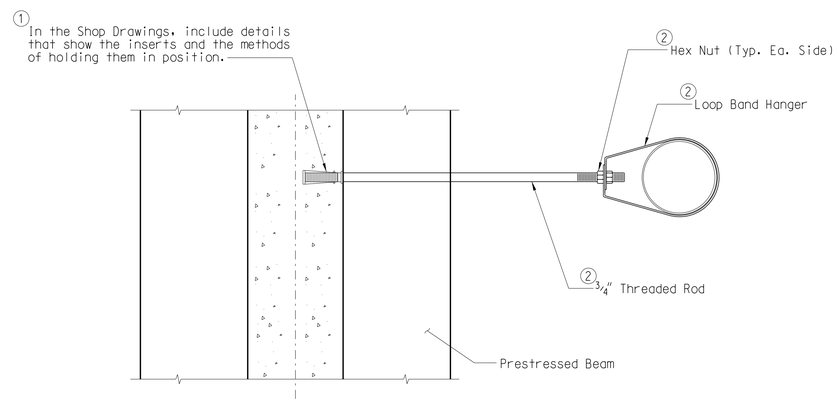

SECTION B-B

1 3/4" zinc electroplated ferrule wing nut, UNC threads, 1/0 minimum gage wire not more than 4" in depth with a minimum ultimate tensile strength of 2.0 kips in 5,000 psi concrete.

2 Loop band hanger, threaded rod, and nuts are to be galvanized in accordance with AASHTO M 111, AASHTO M 232, or ASTM F 2329 as applicable.

REV.			
REV.	PCW	LEM	2-18
	MASH	Guardrail	
DR.	BRK	SAN	8-07

Printed: Wednesday, April 25, 2018 9:9:46 AM

DRAWING NO. 700-05.01